BEACON
HR & PAYROLL

BEACON HR/PAYROLL IMPLEMENTATION PROJECT
LEGACY APPLICATION MAPPING TO SAP MODULES

DOCUMENT HISTORY

Date	Document Revision	Document Revision Description	Document Author
04/17/06	1.0	Initial Release	GREG BAKER

BEACON
HR & PAYROLL

APPROVERS

Approval Date	Approver Name and Role	Approver Signature
7/12/06	Andrew Koenigsberg, Deputy PD	
7-31-06	Lori Foehr, PGM Mgr	

PMO RELEASE AUTHORIZATION

Release Authority:	Anya Powell	Date:	8-1-06
Version#:	1.0		

BEACON
HR & PAYROLL

TABLE OF CONTENTS

1 LEGACY APPLICATION MAPPING TO SAP

2 CURRENT STATE

3 FUTURE STATE - SAP

BEACON
HR & PAYROLL

LEGACY APPLICATION MAPPING TO SAP

Application	Agency/Dept	Business Process	# of End Users	Description	Future State within SAP
PMIS – Personnel Management Information System	OSP	HR, Payroll, Personnel Data, Time Mgmt	TBD	Manages Personnel Data for employees in State Agencies & Universities	SAP HR PA
Benefit Payment	ESC	Accounting Finance/Payroll	TBD	Process claims for unemployment compensation	SAP HR PA/PY
Salary Control Module	OSMB	Accounting Finance/Payroll	TBD	Manage salary obligations and salary reserve availability	Future SAP FM/OM/PA/PY
Justice Employee Leave	DOJ	Time Management Sheets	TBD	Manage leave use and balances for DOJ	SAP HR PT
Prospective Teachers	DPI	Accounting Finance/Payroll Education, Human Resources, Inventory, Other	TBD	Used to enter, rank and maintain date for applicants for the PTSL.	Future eRecruitment
Teacher Assistant	DPI	Accounting Finance/Payroll Education, Human Resources, Inventory, Other	TBD	Used to enter, rank and maintain date for applicants for the TASL.	Future eRecruitment

BEACON
HR & PAYROLL

LEGACY APPLICATION MAPPING TO SAP

Application	Agency/Dept	Business Process	# of End Users	Description	Future State within SAP
Applicant Tracking V4	DCR	Personnel, Human Resources	TBD	Tracking applications, EEOC data, documenting hiring process	Future eRecruitment
NCDOT Business Systems Information Protal (BSIP)	DOT	Accounting Finance/Payroll	TBD	Tracking Financials, Fleet Management, Equipment (DOT,DPI,SHP), Time Entry, Project Systems and IXOS	SAP Portal (HR, PA,PT,PY)
Personnel Mgt Information System	DHHS	Human Resources	TBD	Human Resources Management	SAP HR PA
Wage Record	ESC	Accounting Finance/Payroll	TBD	Receive, edit and balance quarterly wage reports	SAP HR PY
Payroll ***	DOT	Transportation, Accounting Finance/Payroll	TBD	Payment of DOT employees	SAP HR PY
State Payroll ***	OSC	Accounting Finance/Payroll	TBD	Payroll for 67 agencies	SAP HR PY
Laser Check & ACH Payments	OSC	Accounting Finance/Payroll	TBD	Tools for handling payments and direct deposits	Future SAP FI/FM
Miscellaneous Payments	ESC	Accounting Finance/Payroll	TBD	Process payments to special program participants	Future SAP FI/FM

BEACON
HR & PAYROLL

LEGACY APPLICATION MAPPING TO SAP

Application	Agency/Dept	Business Process	# of End Users	Description	Future State within SAP
Integrated Tax Administration System (ITAS)	DOR	Accounting Finance/Payroll	TBD	Process returns and payments for the major tax schedules for DOR	SAP FI/FM/PY
Temporary and Part time Payroll System	Agriculture	Accounting Finance/Payroll	TBD	Payroll for the temporary and/or part-time employees in NCDA&CS	SAP HR PA/PT/PY
Salary System	DPI	Accounting, Finance, Payroll, Education, Records/Data Management, Unique Business Systems	TBD	Collects payroll data from all LEA's via UERS and audits for compliance with State/Federal laws.	SAP HR PY
Vocational Payroll System	DHHS	Accounting, Finance, Payroll, Administration, Adult Services	TBD	Access based system used to record work performed and pay Vocational Workship employees	SAP HR PT
Leave	DCR	Time Management Sheets	TBD	Employee leave summaries	SAP HR PT
Leave Accounting	ITS	Time Management Sheets	TBD	Maintains ongoing record of employee time and produces a monthly leave report	SAP HR PT

BEACON
HR & PAYROLL

LEGACY APPLICATION MAPPING TO SAP

Application	Agency/Dept	Business Process	# of End Users	Description	Future State within SAP
Leave - DOA	DOA	Time Management Sheets	TBD	Tracks employee annual sick, comp, military, community and bonus leave and reports monthly	SAP HR PT
DCI Activities Database	DOJ	Time Management Sheets	TBD	Records staff members time spent by activity, system, application maintenance and other activities	SAP HR PT
TLAS	DENR	Time Management Sheets	TBD	DENR Timesheets for personnel	SAP HR PT
Timesheets DPI	DPI	Time Management Sheets	TBD	Tools to manage employee time sheets	SAP HR PT
Leave Accounting System	CC&PS	Time Management Sheets	TBD	Tracks and reports employee leave	SAP HR PT
NCEM Time and Attendance System	CC&PS	Time Management Sheets	TBD	Records and tracks hours worked, leave, etc. as it relates to specific disasters	SAP HR PT

BEACON
HR & PAYROLL

LEGACY APPLICATION MAPPING TO SAP

Application	Agency/Dept	Business Process	# of End Users	Description	Future State within SAP
Niku Portfolio Manager	DHHS	Accounting Finance/Payroll	TBD	DIRM Time Keeping and Project Mangment System	SAP HR PT
Timekeeping and Payroll	DHHS	Time Management Sheets	TBD	Records employee time records and produces shift differential and supplemental payroll report	SAP HR PT
Automated Time & Leave Accounting System (ATLAS) v2	Commerce	Time Management Sheets	TBD	Employee leave tracking system	SAP HR PT
Time Reporting System	OSA	Time Management Sheets	TBD	Time management and reporting for all OSA and provides billing information for cost recovery.	SAP HR PT
Automated Time & Leave Accounting System (ATLAS) v1	Agriculture	Time Management Sheets	TBD	Collects and processes information about employee work and leave hours	SAP HR PT
Justice Agent Overtime	DOJ	Time Management Sheets	TBD	Accumulates time from Time Reporting System and calculates overtime hours	SAP HR PT
SBI Agent Time Reporting	DOJ	Time Management Sheets	TBD	Support time reporting requirements for SBI agents	SAP HR PT

BEACON
HR & PAYROLL

LEGACY APPLICATION MAPPING TO SAP

Application	Agency/Dept	Business Process	# of End Users	Description	Future State within SAP
Time and Attendance System	DST	Accounting Finance/Payroll	TBD	Maintain leave records for each employee	SAP HR PT
Staff Training and Development System	DHHS	Human Resources	TBD	Maintains staff training histories	SAP PD TEM/Qual
NBPTS DPI	DPI	Accounting, Payroll, Finance, Education, Human Resources, Licensing, Personnel, Records, Data Management	TBD	Tracks/Reports information on National Board of Professional Teaching Standards certified teachers and teachers involved in certification process	SAP PD TEM/Qual
Training	DCR	Personnel, Human Resources, Records, Data Management	TBD	Employee training tracking	SAP PD TEM/Qual

BEACON
HR & PAYROLL

CURRENT STATE

Note: Need original to update diagram for this slide deck

Current System Interfaces as of April 2003

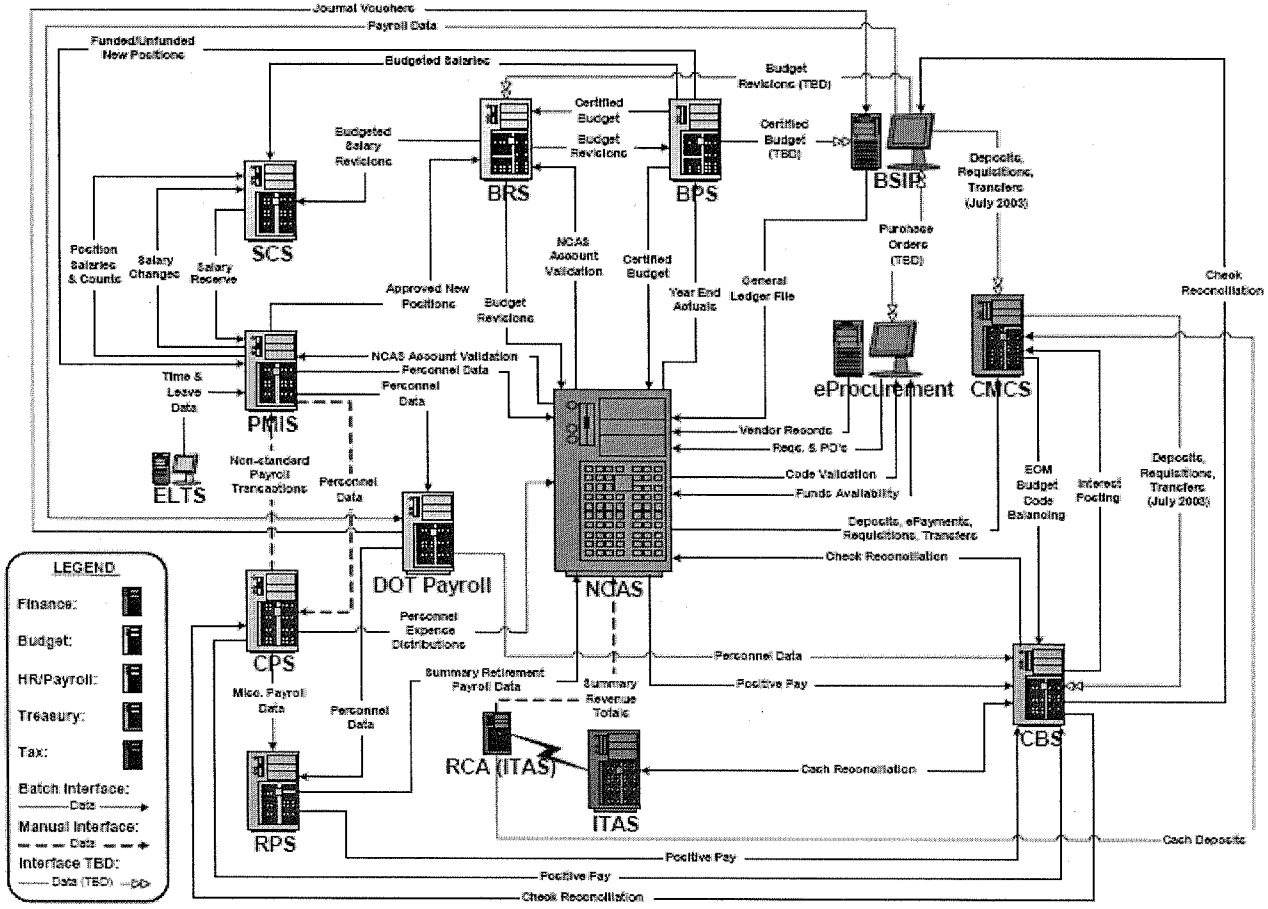

BEACON
HR & PAYROLL

FUTURE STATE - SAP

SAP Human Resources

PA – Personnel Administration
OM - Organizational Management
PT – Personnel Time Management
PY - Payroll
TEM - Training and Events Management
PD – Personnel Development

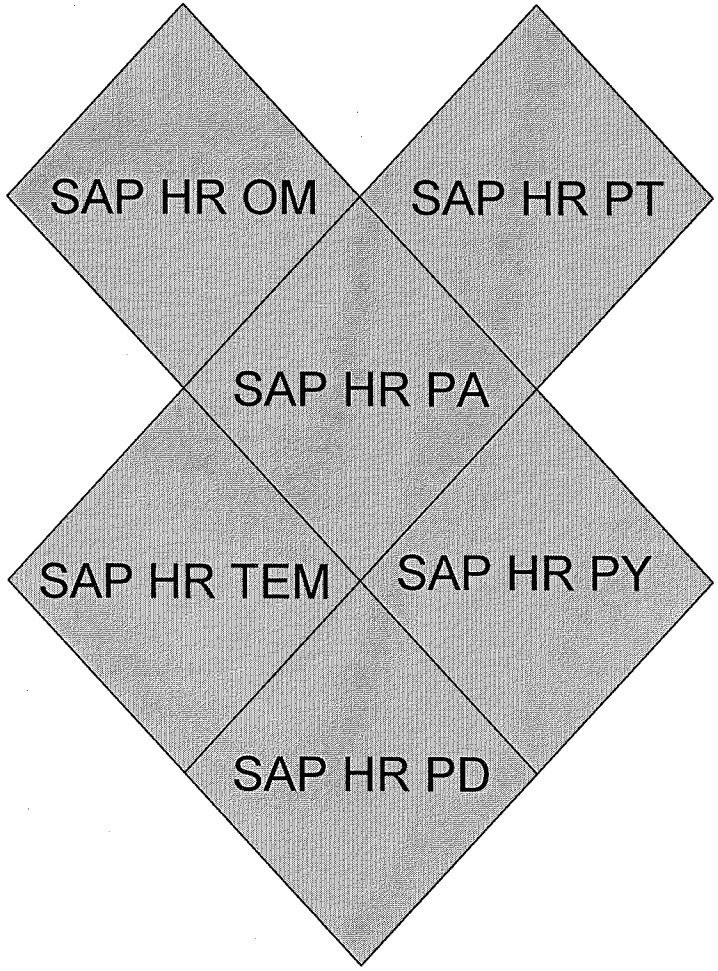

BEACON
HR & PAYROLL
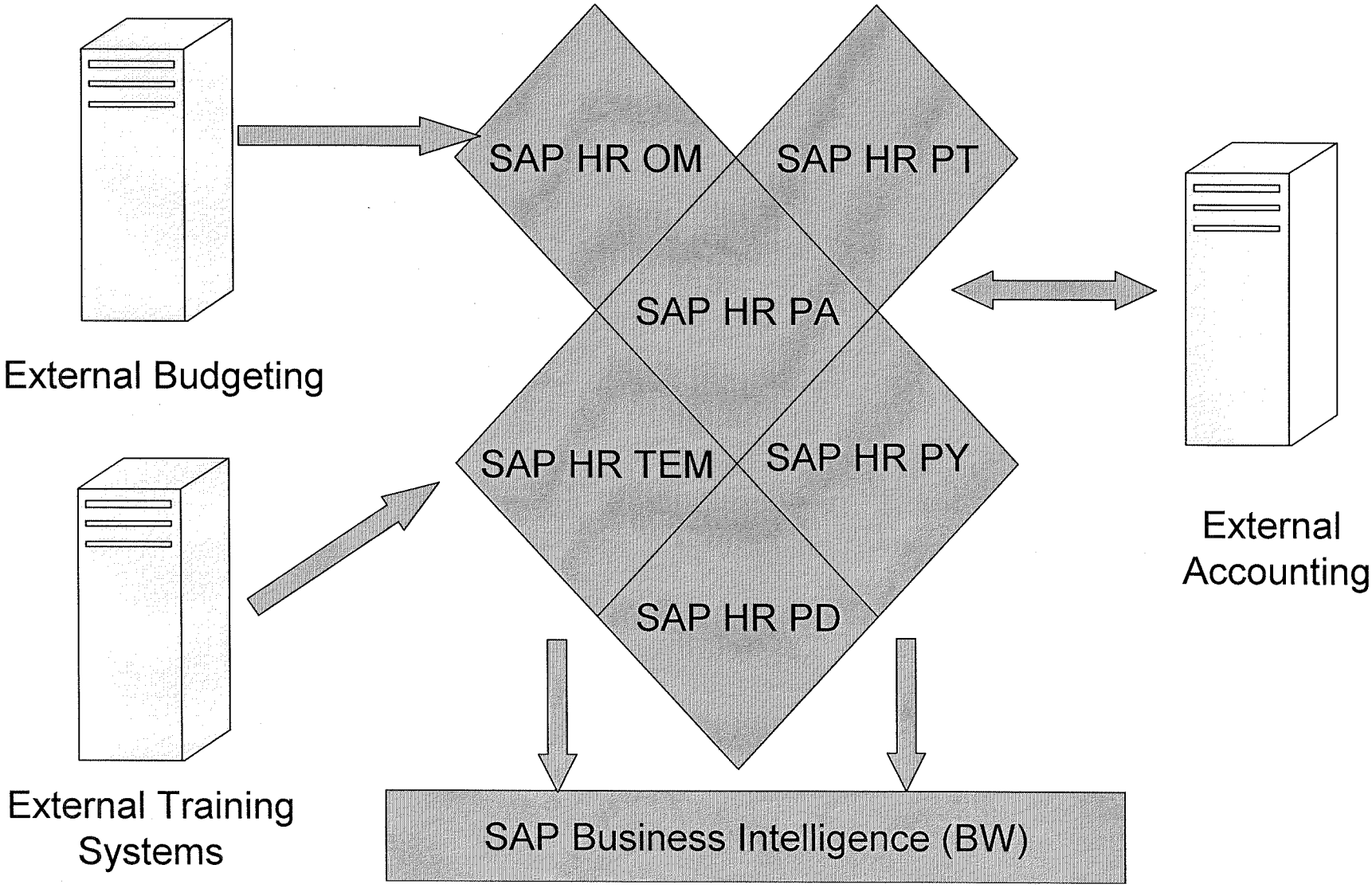
FUTURE STATE - SAP